Reduce Product Loss and Increase Sanitation with Efficient Cleaning Systems

Whether you're conveying freshly-baked bread, ripe produce, or sliced bacon, yield and timeliness shouldn't have to take a backseat to sanitation and food safety. With the comprehensive line of cleaners from Flexco, they don't. Flexco Food Grade Primary, Secondary, and Cleated Belt Cleaners not only ensure that valuable materials aren't being left on the belt or falling to the floor, but are easy to install and maintain so you can keep your lines running and deliver on the commitments you made to your customers.

Designed with food-grade materials and stainless steel components, the Food Grade Primary Cleaner, Food Grade Primary Cleaner with External Spring, Food Grade Primary Cleaner for Cleated Belts, and Food Grade Secondary Cleaner can tackle any challenge the food industry throws at them. They are easy to operate, adjust, and tension, minimizing blade wear, eliminating belt damage, and maximizing cleaning efficiency.

Patents: www.flexco.com/patents

A Cleaner for Every Food Processing Application

Flexco cleaners feature a small footprint and come with a complete hardware set, including side plates and standoffs, so installation in any area of the conveyor is fast and easy. Cleaner blades are made with FDA-food grade UHMW and are available in white, blue, and metal detectable blue, and for uneven or soft-cover belts, blue metal detectable dual durometer. The simple, snap-in blade design allows for easy disassembly for quick maintenance, meaning your conveyor will be up and running in no time.

Food Grade Primary Cleaner

Mounted at the head pulley or in the secondary position, the FGP is corrosion resistant with limited crevices for bacteria growth. Ideal for industrial baking, confectionery, and fruit and vegetable processing.

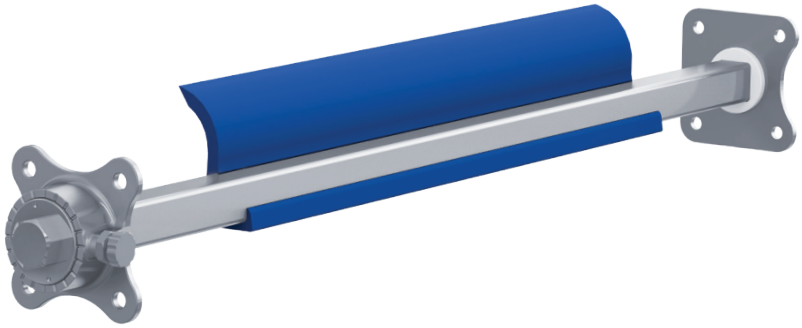

- Less downtime for installation thanks to the C-dimension verification gauge that makes pole location and mounting quicker and easier.
- Available with metal detectable tip or dual durometer blue blade for use with soft cover and uneven belts.
- Blades are available in 12–60" (305–1524mm) widths.

Food Grade Primary Cleaner with External Spring

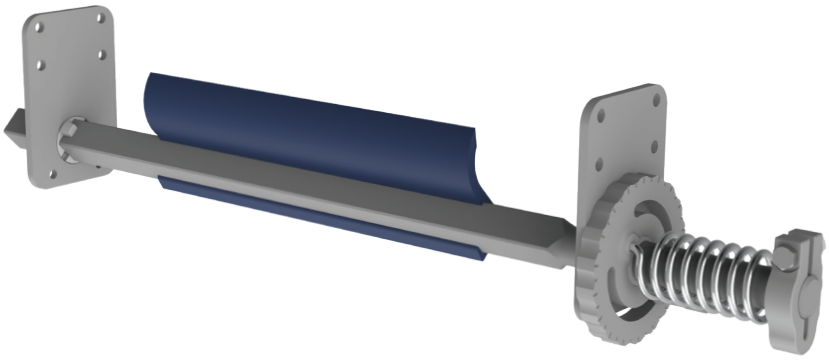

Mounted at the head pulley or in the secondary position, the FGP-ES features exposed components, including an external spring, making it easy to clean and maintain. Ideal for highly sanitary applications, like beef, pork and poultry, on homogenous or modular belting.

- Exposed components make the system easy to clean, allow visual inspection, and simplify maintenance.
- Available in left or right-side installation for the service or operations side of the belt.
- Blades are available in 12–48" (305–1219mm) widths.
- Evaluated for Third Party Conformance by BEAG for ANSI/ASB Z50.2-2015(R2020) Bakery Equipment Sanitation Requirements.

Food Grade Cleaner Specifications

Food Grade Cleaner	Blade Material	Temperature Range		Blade Height		Blade Length Range	Cleaner Construction Material	Blade Hardness		Pulley Diameter Range
		UHMW	Dual Durameter	UHMW	Dual Durameter			UHMW	Urethane	
Food Grade Primary Cleaner	Food-grade UHMW, UHMW with Stainless Steel, or Urethane with PVC	-20 to 140°F (-29 to 60°C)	+32 to 140°F (0 to 60°C)	3.0" (76mm)	3.0" (76mm)	12–60" (305–1524mm)	304 Stainless Steel	63D Shore Hardness	85A Shore Hardness	2–10.5" (50–267mm)
Food Grade Primary Cleaner with External Spring	Food-grade UHMW, UHMW with Stainless Steel, or Urethane with PVC	-20 to 140°F (-29 to 60°C)	+32 to 140°F (0 to 60°C)	3.0" (76mm)	3.0" (76mm)	12–48" (305–1219mm)	304 Stainless Steel	63D Shore Hardness	85A Shore Hardness	2–10.5" (50–267mm)

Food Grade Primary Cleaner for Cleated Belts

Mounted at the underside of the head pulley, the FGP-C has a curved blade that efficiently cleans excess product off the belt and cleats. The cleaner rotates so the blade can maintain full contact with the cleat. This makes the FGP-C ideal for beef, pork, and poultry applications that employ cleated modular belts.

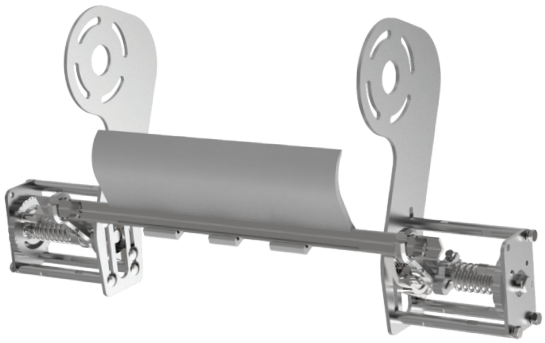

- Snap-blade easily attaches and removes from the structure, promoting quick assembly and repairs.
- Product has been engineered to prevent carryback in bulk meat processing.
- Available for plastic modular belts up to 36" wide with cleats up to 3" tall.
- Designed-to-order to ensure proper fit with your specific conveyor.

Food Grade Secondary Cleaner

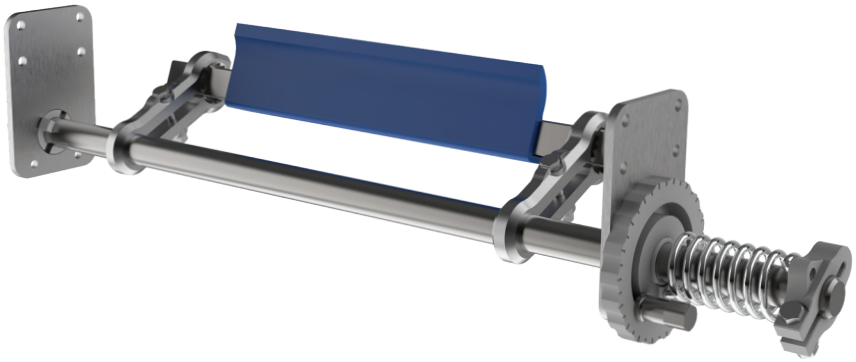

Mounted 1–4" (25–100mm) from the transition point where the belt leaves the head pulley, or any location down the beltline, the blade can be in the leading or trailing position, with a variety of blade angles for better cleaning efficiency. Ideal for fruit and vegetable, oil and aluminum dust, and industrial baking applications.

- Simple design with small footprint, featuring solid, stainless steel components and food-grade materials that can be installed in any area and easily cleaned.
- A secondary cleaner with built in flexibility to operate with the blade trailing or leading at a variety of blade-to-belt contact angles.
- Blades are available in 12–84" (305–2134mm) widths.
- Evaluated for Third Party Conformance by BEAG for ANSI/ASB Z50.2-2015(R2020) Bakery Equipment Sanitation Requirements.

Food Grade Cleaner Specifications

Food Grade Cleaner	Blade Material	Temperature Range		Blade Height		Blade Length Range	Cleaner Construction Material	Blade Hardness		Pulley Diameter Range
		UHMW	Dual Durameter	UHMW	Dual Durameter			UHMW	Urethane	
Food Grade Primary Cleaner for Cleated Belts	Food-grade UHMW or UHMW with Stainless Steel	-20 to 140°F (-29 to 60°C)	N/A	6.0" (152mm)	N/A	4–36" (101–914mm)	304 Stainless Steel	63D Shore Hardness	N/A	N/A
Food Grade Secondary Cleaner	Food-grade UHMW, UHMW with Stainless Steel, or Urethane with PVC	-20 to 140°F (-29 to 60°C)	+32 to 140°F (0 to 60°C)	2.0" (50mm)	3.0" (76mm)	12–84" (305–2134mm)	304 Stainless Steel	63D Shore Hardness	85A Shore Hardness	N/A

FLEXCO

FGP Food Grade Primary Cleaner

Blade Width		Maximum Conveyor Width		Weight		White Blade		Blue Blade		Blue Metal DetectableBlade		Blue Dual Durometer Blade	
in.	mm	in.	mm	lbs.	kg.	Ordering Number	Item Code	Ordering Number	Item Code	Ordering Number	Item Code	Ordering Number	Item Code
12	305	22	559	6.7	3.0	FGP-W3-12	56009	FGP-BL3-12	56000	FGP-MD3-12	56027	FGP-MDDD3-12	56018
18	457	28	711	7.7	3.5	FGP-W3-18	56010	FGP-BL3-18	56001	FGP-MD3-18	56028	FGP-MDDD3-18	56019
24	610	34	864	8.6	3.9	FGP-W3-24	56011	FGP-BL3-24	56002	FGP-MD3-24	56029	FGP-MDDD3-24	56020
30	762	40	1016	9.5	4.3	FGP-W3-30	56012	FGP-BL3-30	56003	FGP-MD3-30	56030	FGP-MDDD3-30	56021
36	914	46	1168	10.5	4.8	FGP-W3-36	56013	FGP-BL3-36	56004	FGP-MD3-36	56031	FGP-MDDD3-36	56022
42	1067	52	1321	11.5	5.2	FGP-W3-42	56014	FGP-BL3-42	56005	FGP-MD3-42	56032	FGP-MDDD3-42	56023
48	1219	58	1473	12.4	5.6	FGP-W3-48	56015	FGP-BL3-48	56006	FGP-MD3-48	56033	FGP-MDDD3-48	56024
54	1372	64	1626	13.3	6.0	FGP-W3-54	56016	FGP-BL3-54	56007	FGP-MD3-54	56034	FGP-MDDD3-54	56025
60	1524	70	1778	14.2	6.4	FGP-W3-60	56017	FGP-BL3-60	56008	FGP-MD3-60	56035	FGP-MDDD3-60	56026

FGP-ES Food Grade Primary Cleaner with External Spring

Blade Width		Maximum Conveyor Width		Weight		White Blade		Blue Blade		Blue Metal DetectableBlade		Blue Dual Durometer Blade	
in.	mm	in.	mm	lbs.	kg.	Ordering Number	Item Code	Ordering Number	Item Code	Ordering Number	Item Code	Ordering Number	Item Code
12	305	22	559	13.5	6.2	FGPES-A-W3-12/305	106414	FGPES-A-BL3-12/305	106400	FGPES-A-MD3-12/305	106428	FGPES-A-MDDD3-12/305	106442
						FGPES-B-W3-12/305	106415	FGPES-B-BL3-12/305	106401	FGPES-B-MD3-12/305	106429	FGPES-B-MDDD3-12/305	106443
18	457	28	711	15.1	6.8	FGPES-A-W3-18/457	106416	FGPES-A-BL3-18/457	106402	FGPES-A-MD3-18/457	106430	FGPES-A-MDDD3-18/457	106444
						FGPES-B-W3-18/457	106417	FGPES-B-BL3-18/457	106403	FGPES-B-MD3-18/457	106431	FGPES-B-MDDD3-18/457	106445
24	610	34	864	16.8	7.6	FGPES-A-W3-24/610	106418	FGPES-A-BL3-24/610	106404	FGPES-A-MD3-24/610	106432	FGPES-A-MDDD3-24/610	106446
						FGPES-B-W3-24/610	106419	FGPES-B-BL3-24/610	106405	FGPES-B-MD3-24/610	106433	FGPES-B-MDDD3-24/610	106447
30	762	40	1016	18.5	8.4	FGPES-A-W3-30/762	106420	FGPES-A-BL3-30/762	106406	FGPES-A-MD3-30/762	106434	FGPES-A-MDDD3-30/762	106448
						FGPES-B-W3-30/762	106421	FGPES-B-BL3-30/762	106407	FGPES-B-MD3-30/762	106435	FGPES-B-MDDD3-30/762	106449
36	914	46	1168	20.2	9.2	FGPES-A-W3-36/914	106422	FGPES-A-BL3-36/914	106408	FGPES-A-MD3-36/914	106436	FGPES-A-MDDD3-36/914	106450
						FGPES-B-W3-36/914	106423	FGPES-B-BL3-36/914	106409	FGPES-B-MD3-36/914	106437	FGPES-B-MDDD3-36/914	106451
42	1067	52	1321	22.0	10.0	FGPES-A-W3-42/1067	106424	FGPES-A-BL3-42/1067	106410	FGPES-A-MD3-42/1067	106438	FGPES-A-MDDD3-42/1067	106452
						FGPES-B-W3-42/1067	106425	FGPES-B-BL3-42/1067	106411	FGPES-B-MD3-42/1067	106439	FGPES-B-MDDD3-42/1067	106453
48	1219	58	1473	23.7	10.8	FGPES-A-W3-48/1219	106426	FGPES-A-BL3-48/1219	106412	FGPES-A-MD3-48/1219	106440	FGPES-A-MDDD3-48/1219	106454
						FGPES-B-W3-48/1219	106427	FGPES-B-BL3-48/1219	106413	FGPES-B-MD3-48/1219	106441	FGPES-B-MDDD3-48/1219	106455

FGS Food Grade Secondary Cleaner

Blade Length		Maximum Conveyor Width		Weight		White Blade		Blue Blade		Blue Metal DetectableBlade		Blue Dual Durometer Blade	
in.	mm	in.	mm	lbs.	kg.	Ordering Number	Item Code	Ordering Number	Item Code	Ordering Number	Item Code	Ordering Number	Item Code
12	305	20	508	16.5	7.5	FGS-A-W2-12/305	106320	FGS-A-BL2-12/305	106300	FGS-A-MD2-12/305	106340	FGS-A-MDDD3-12/305	106360
						FGS-B-W2-12/305	106321	FGS-B-BL2-12/305	106301	FGS-B-MD2-12/305	106341	FGS-B-MDDD3-12/305	106361
18	457	26	660	18.5	8.4	FGS-A-W2-18/457	106322	FGS-A-BL2-18/457	106302	FGS-A-MD2-18/457	106342	FGS-A-MDDD3-18/457	106362
						FGS-B-W2-18/457	106323	FGS-B-BL2-18/457	106303	FGS-B-MD2-18/457	106343	FGS-B-MDDD3-18/457	106363
24	610	32	813	20.4	9.3	FGS-A-W2-24/610	106324	FGS-A-BL2-24/610	106304	FGS-A-MD2-24/610	106344	FGS-A-MDDD3-24/610	106364
						FGS-B-W2-24/610	106325	FGS-B-BL2-24/610	106305	FGS-B-MD2-24/610	106345	FGS-B-MDDD3-24/610	106365
30	762	38	965	22.4	10.2	FGS-A-W2-30/762	106326	FGS-A-BL2-30/762	106306	FGS-A-MD2-30/762	106346	FGS-A-MDDD3-30/762	106366
						FGS-B-W2-30/762	106327	FGS-B-BL2-30/762	106307	FGS-B-MD2-30/762	106347	FGS-B-MDDD3-30/762	106367
36	914	44	1118	24.3	11.1	FGS-A-W2-36/914	106328	FGS-A-BL2-36/914	106308	FGS-A-MD2-36/914	106348	FGS-A-MDDD3-36/914	106368
						FGS-B-W2-36/914	106329	FGS-B-BL2-36/914	106309	FGS-B-MD2-36/914	106349	FGS-B-MDDD3-36/914	106369
42	1067	50	1270	26.3	11.9	FGS-A-W2-42/1067	106330	FGS-A-BL2-42/1067	106310	FGS-A-MD2-42/1067	106350	FGS-A-MDDD3-42/1067	106370
						FGS-B-W2-42/1067	106331	FGS-B-BL2-42/1067	106311	FGS-B-MD2-42/1067	106351	FGS-B-MDDD3-42/1067	106371
48	1219	56	1422	28.2	12.8	FGS-A-W2-48/1219	106332	FGS-A-BL2-48/1219	106312	FGS-A-MD2-48/1219	106352	FGS-A-MDDD3-48/1219	106372
						FGS-B-W2-48/1219	106333	FGS-B-BL2-48/1219	106313	FGS-B-MD2-48/1219	106353	FGS-B-MDDD3-48/1219	106373
54	1372	64	1626	31.3	14.2	FGS-AB-W2-54/1372	106334	FGS-AB-BL2-54/1372	106314	FGS-AB-MD2-54/1372	106354	FGS-AB-MDDD3-54/1372	106374
60	1524	70	1778	33.3	15.1	FGS-AB-W2-60/1524	106335	FGS-AB-BL2-60/1524	106315	FGS-AB-MD2-60/1524	106355	FGS-AB-MDDD3-60/1524	106375
66	1676	76	1930	35.2	16.0	FGS-AB-W2-66/1676	106336	FGS-AB-BL2-66/1676	106316	FGS-AB-MD2-66/1676	106356	FGS-AB-MDDD3-66/1676	106376
72	1828	82	2083	37.2	16.9	FGS-AB-W2-72/1829	106337	FGS-AB-BL2-72/1829	106317	FGS-AB-MD2-72/1829	106357	FGS-AB-MDDD3-72/1829	106377
78	1981	88	2235	58.6	26.5	FGS-AB-W2-78/1981	106338	FGS-AB-BL2-78/1981	106318	FGS-AB-MD2-78/1981	106358	FGS-AB-MDDD3-78/1981	106378
84	2134	94	2388	63.1	28.6	FGS-AB-W2-84/2134	106339	FGS-AB-BL2-84/2134	106319	FGS-AB-MD2-84/2134	106359	FGS-AB-MDDD3-84/2134	106379

NOTE: Weights are approximate and are subject to change by manufacturer. Dual durometer blade is not compliant with Health Canada or EU 1935/2004.

©2023 Flexible Steel Lacing Company. 10/15/25. W2456